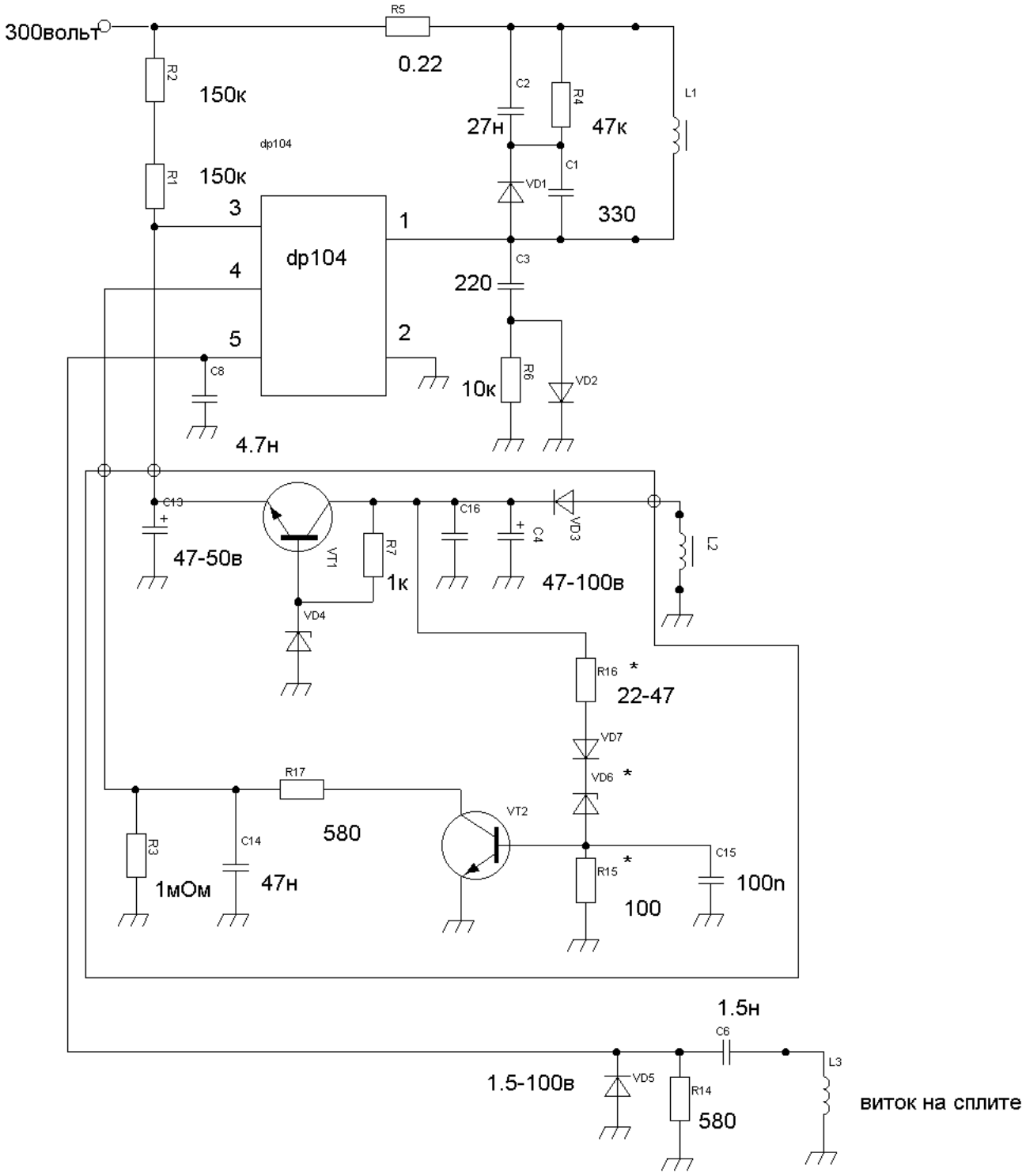

www.DataSheetLIST.com