R2A15908SP

5 Input Selector 2ch Electronic Volume with Tone & Surround

REJ03F0270-0100
Rev.1.00
Jan 25, 2008

Description

The R2A15908SP is an optimum audio signal processor IC for TV. It has a 5ch input selector with mono switch, surround, tone control (2band), input gain control and 2ch master volume. It can control all of these functions with I_2C bus.

Features

- Volume 0 to –87dB, –∞ / 1dB step
  Each channel is independent control.
- 5 input selector + MUTE with mono switch
- Input gain control 0dB to +20dB / 2dB step
- Tone control Bass : –14dB to +14dB / 2dB step
  Treble : – 14dB to +14dB / 2dB step
- Surround Low / High
- Mode selector Bypass / Tone / Tone & Surround
- I_2C-bus control
- Package SOP with 28 pin

Application

- Mini stereo, TV, etc.

Recommended Operating Condition

- Supply voltage …… V_{CC} = 9.0V (typ)

System Configuration

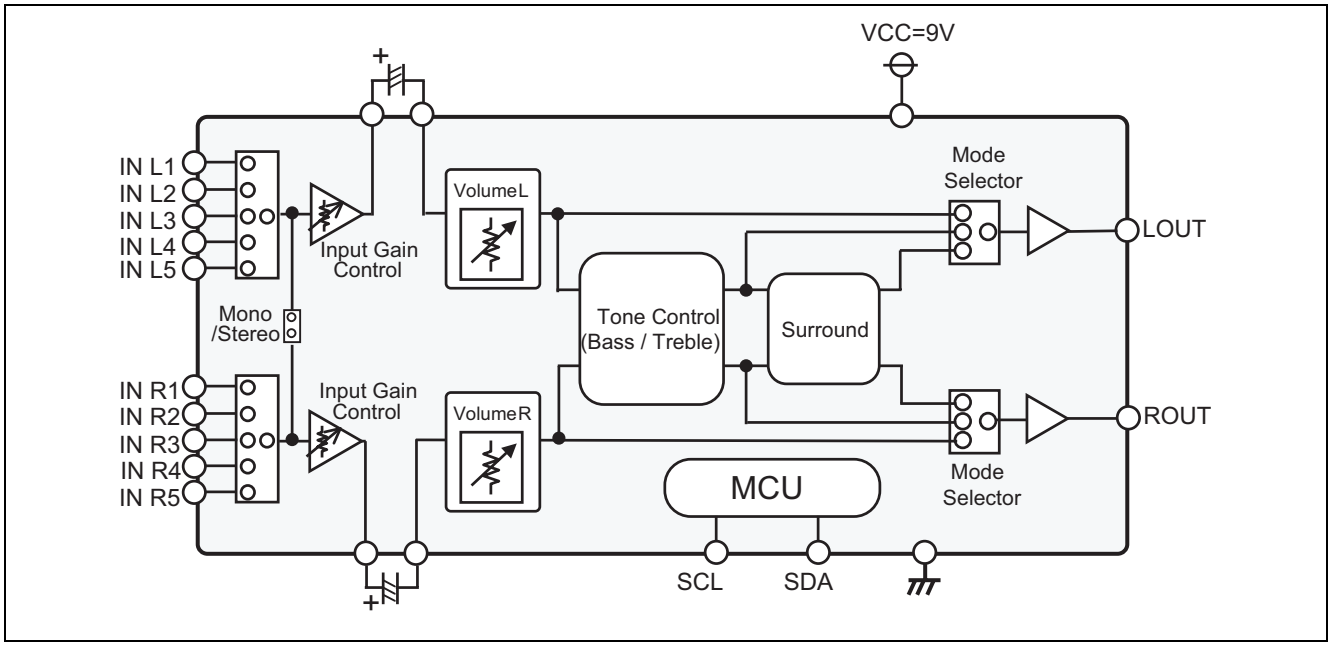

Block Diagram and Pin Configuration

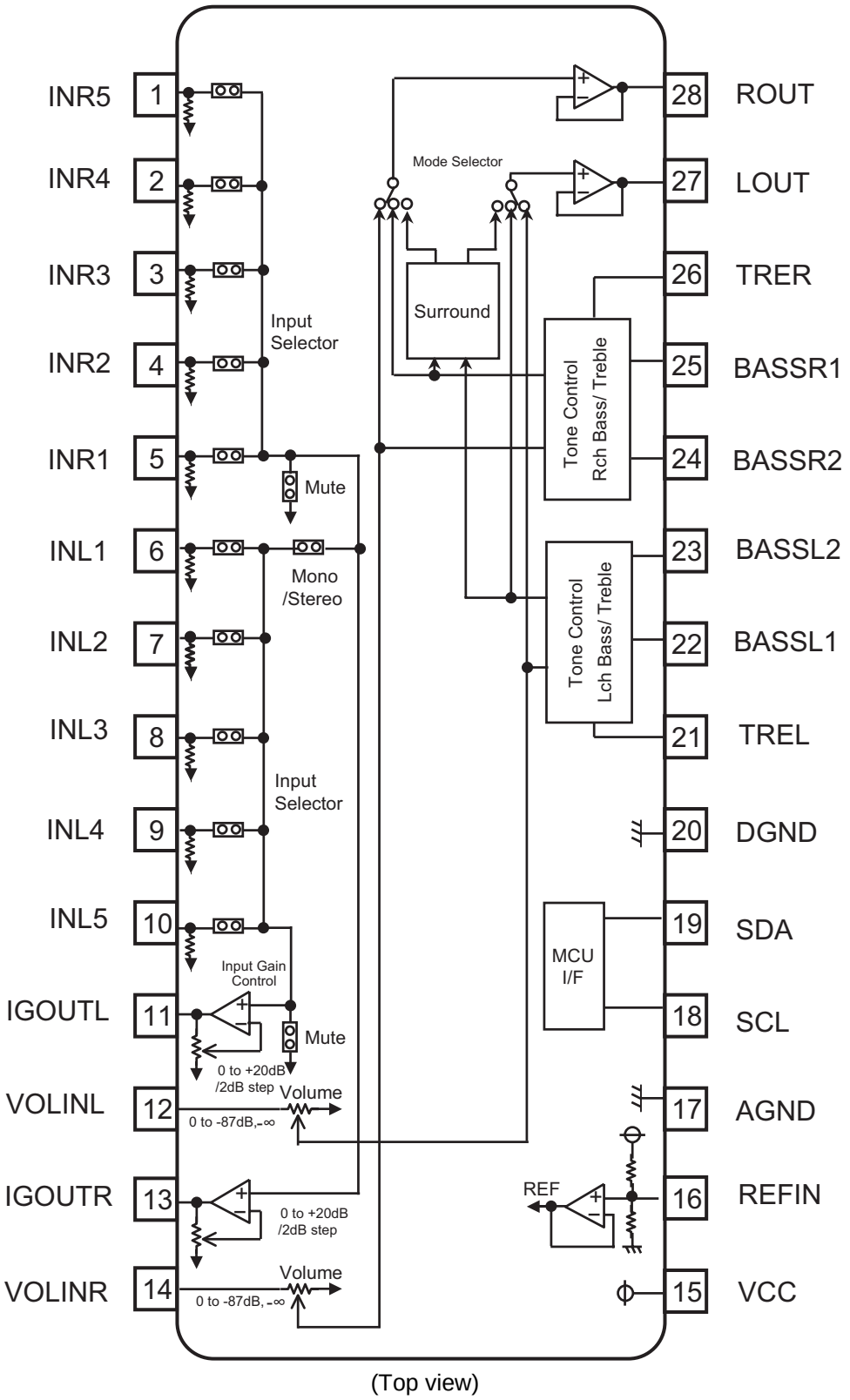

(Top view)

Application Example

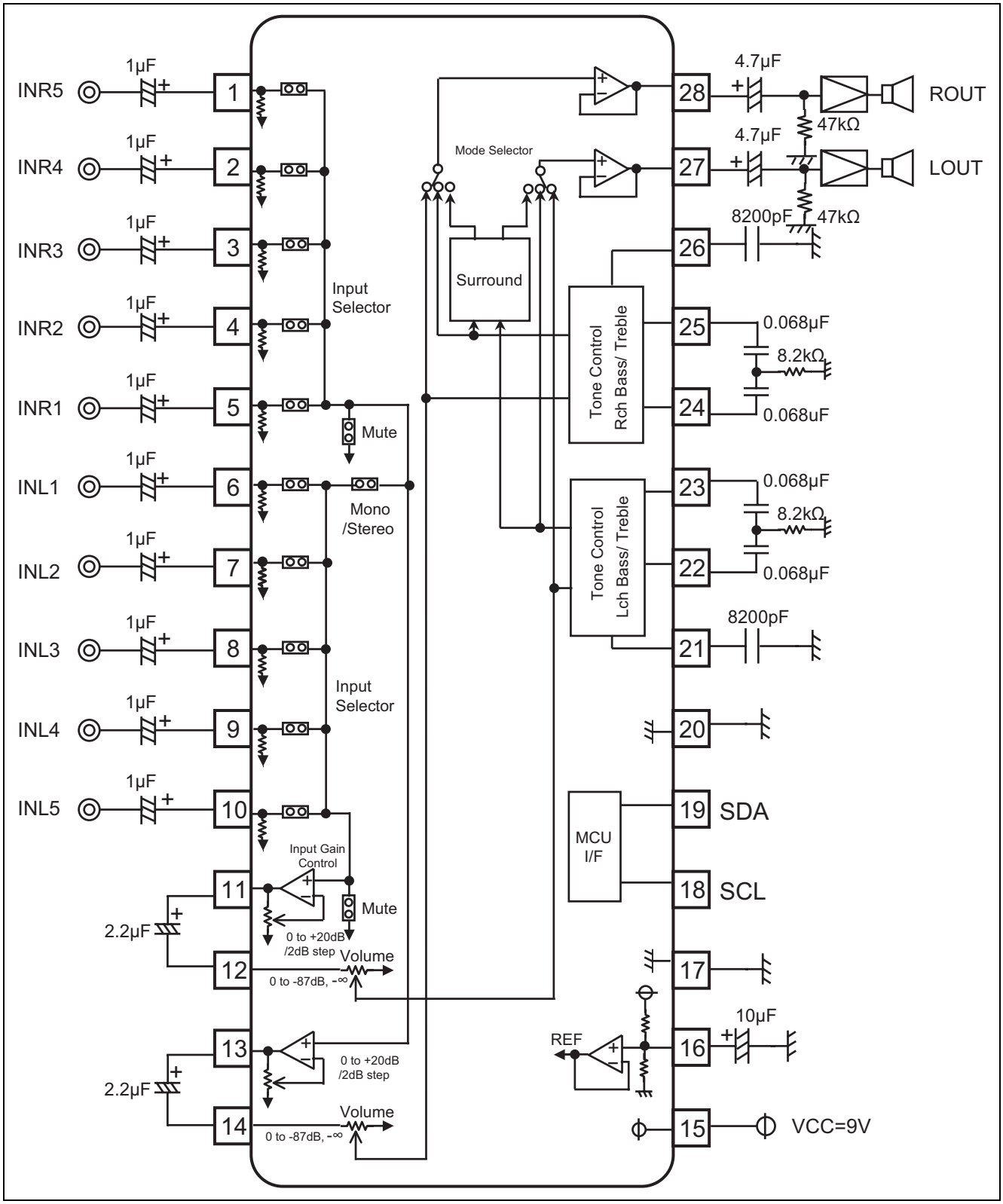

Equivalent Circuit of Pin Interface Block

Pin	Pin Name	Equivalent Circuit
1 2 3 4 5 6 7 8 9 10	INR5 INR4 INR3 INR2 INR1 INL1 INL2 INL3 INL4 INL5	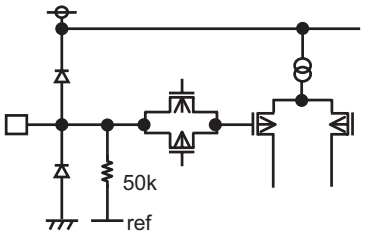
11 13 27 28	IGOUTL IGOUTR LOUT ROUT	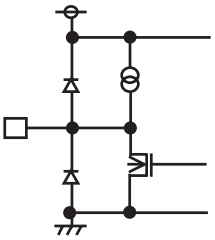
12 14	VOLINL VOLINR	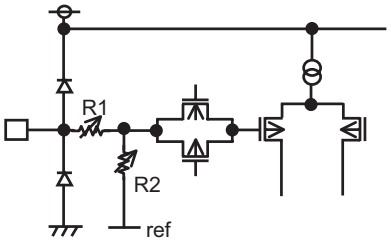 R1+R2=50kΩ
18	SCL	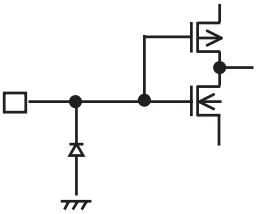
19	SDA	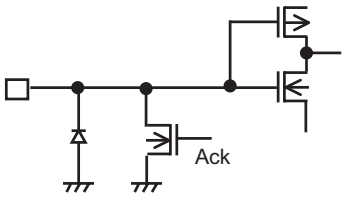
16	REFIN	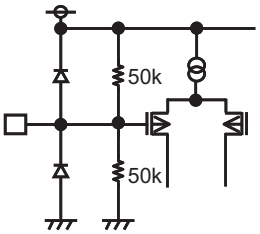
15 17 20	VCC AGND DGND	—

Pin	Pin Name	Equivalent Circuit
22 25	BASSR1 BASSL1	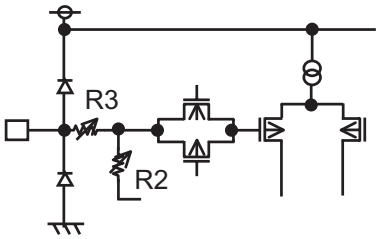 R2+R3=80kΩ
23 24	BASSR2 BASSL2	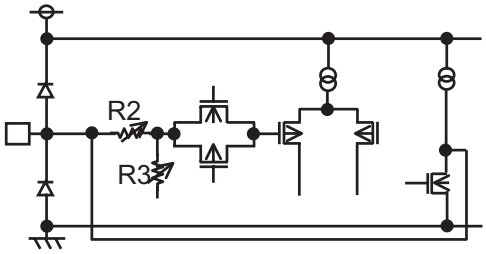 R2+R3=80kΩ
21 26	TRER TREL	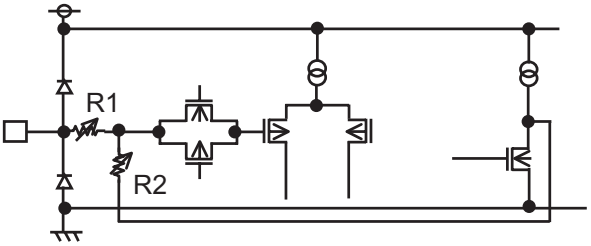 R1+R2=30kΩ

Absolute Maximum Ratings

Parameter	Symbol	Ratings	Unit	Condition
Power supply	V_{CC}	10	V	
Power dissipation	Pd		W	Ta ≤ 25°C
Thermal derating	K		mW / °C	Ta > 25°C (Circuit board installation)
Operating temperature	Topr	–20 to +75	°C	
Storage temperature	Tstg	–40 to +125	°C	

Power on Reset

This IC built-in the power on reset function.

The voltage of VREF-GND less than 2V, the serial DATA can not accept.

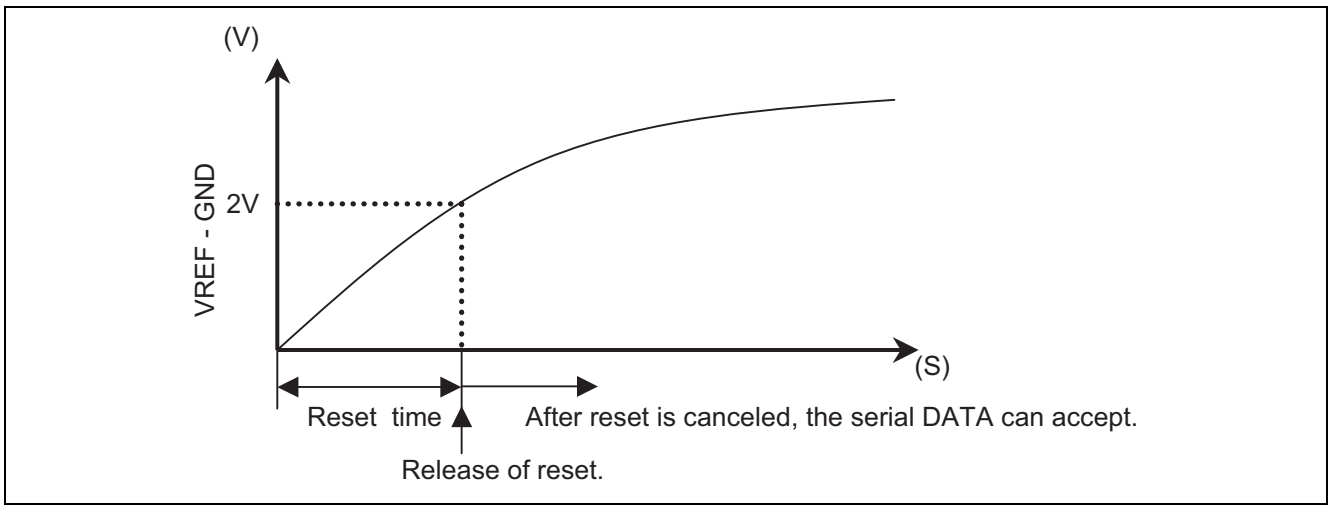

I_2C Bus Format

MSB LSB	MSB LSB		MSB LSB				
S	Slave Address	A	Sub Address	A	Data	A	P
1 bit	8 bit	1 bit	8 bit	1 bit	8 bit	1 bit	1 bit

S: Starting Term
A: Acknowledge Bit
P: Stop Term

If more than one Data Byte is transmitted, then the significant SUB ADDRESS bits are auto incremented.
00H→01H→02H→03H→04H→00H

1. Slave Address

MSB							LSB
1	0	0	0	0	0	1	R/W_B

R/W_B=0 : Write mode for register setting
R/W_B=1 : Not available

2. Sub Address Table

Sub Address	BIT							
	D7	D6	D5	D4	D3	D2	D1	D0
00H	<1>Lch Master volume							0
01H	<1>Rch Master volume							0
02H	<2>Input selector			<3>Input gain				0
03H	<4>Stereo / Mono		<5>Mode selector		0	0	0	0
04H	<6>Tone control Bass				<6>Tone control Treble			

3. Data Table

<1> Master Volume (Sub Address: 00H, 01H)

ATT	Lch	Sub	00H	D7	D6	D5	D4	D3	D2	D1
	Rch	Address	01H	D7	D6	D5	D4	D3	D2	D1
0dB				0	0	0	0	0	0	0
–1dB				0	0	0	0	0	0	1
–2dB				0	0	0	0	0	1	0
–3dB				0	0	0	0	0	1	1
–4dB				0	0	0	0	1	0	0
–5dB				0	0	0	0	1	0	1
–6dB				0	0	0	0	1	1	0
–7dB				0	0	0	0	1	1	1
–8dB				0	0	0	1	0	0	0
–9dB				0	0	0	1	0	0	1
–10dB				0	0	0	1	0	1	0
–11dB				0	0	0	1	0	1	1
–12dB				0	0	0	1	1	0	0
–13dB				0	0	0	1	1	0	1
–14dB				0	0	0	1	1	1	0
–15dB				0	0	0	1	1	1	1
–16dB				0	0	1	0	0	0	0
–17dB				0	0	1	0	0	0	1
–18dB				0	0	1	0	0	1	0
–19dB				0	0	1	0	0	1	1
–20dB				0	0	1	0	1	0	0
–21dB				0	0	1	0	1	0	1
–22dB				0	0	1	0	1	1	0
–23dB				0	0	1	0	1	1	1
–24dB		L ch R ch	Volume	0	0	1	1	0	0	0
–25dB				0	0	1	1	0	0	1
–26dB				0	0	1	1	0	1	0
–27dB				0	0	1	1	0	1	1
–28dB				0	0	1	1	1	0	0
–29dB				0	0	1	1	1	0	1
–30dB				0	0	1	1	1	1	0
–31dB				0	0	1	1	1	1	1
–32dB				0	1	0	0	0	0	0
–33dB				0	1	0	0	0	0	1
–34dB				0	1	0	0	0	1	0
–35dB				0	1	0	0	0	1	1
–36dB				0	1	0	0	1	0	0
–37dB				0	1	0	0	1	0	1
–38dB				0	1	0	0	1	1	0
–39dB				0	1	0	0	1	1	1
–40dB				0	1	0	1	0	0	0
–41dB				0	1	0	1	0	0	1
–42dB				0	1	0	1	0	1	0
–43dB				0	1	0	1	0	1	1
–44dB				0	1	0	1	1	0	0
–45dB				0	1	0	1	1	0	1
–46dB				0	1	0	1	1	1	0
–47dB				0	1	0	1	1	1	1
–48dB				0	1	1	0	0	0	0

ATT	Lch	Sub	00H	D7	D6	D5	D4	D3	D2	D1
	Rch	Address	01H	D7	D6	D5	D4	D3	D2	D1
–49dB				0	1	1	0	0	0	1
–50dB				0	1	1	0	0	1	0
–51dB				0	1	1	0	0	1	1
–52dB				0	1	1	0	1	0	0
–53dB				0	1	1	0	1	0	1
–54dB				0	1	1	0	1	1	0
–55dB				0	1	1	0	1	1	1
–56dB				0	1	1	1	0	0	0
–57dB				0	1	1	1	0	0	1
–58dB				0	1	1	1	0	1	0
–59dB				0	1	1	1	0	1	1
–60dB				0	1	1	1	1	0	0
–61dB				0	1	1	1	1	0	1
–62dB				0	1	1	1	1	1	0
–63dB				0	1	1	1	1	1	1
–64dB				1	0	0	0	0	0	0
–65dB				1	0	0	0	0	0	1
–66dB				1	0	0	0	0	1	0
–67dB				1	0	0	0	0	1	1
–68dB		L ch	Volume	1	0	0	0	1	0	0
–69dB		R ch		1	0	0	0	1	0	1
–70dB				1	0	0	0	1	1	0
–71dB				1	0	0	0	1	1	1
–72dB				1	0	0	1	0	0	0
–73dB				1	0	0	1	0	0	1
–74dB				1	0	0	1	0	1	0
–75dB				1	0	0	1	0	1	1
–76dB				1	0	0	1	1	0	0
–77dB				1	0	0	1	1	0	1
–78dB				1	0	0	1	1	1	0
–79dB				1	0	0	1	1	1	1
–80dB				1	0	1	0	0	0	0
–81dB				1	0	1	0	0	0	1
–82dB				1	0	1	0	0	1	0
–83dB				1	0	1	0	0	1	1
–84dB				1	0	1	0	1	0	0
–85dB				1	0	1	0	1	0	1
–86dB				1	0	1	0	1	1	0
–87dB				1	0	1	0	1	1	1
–∞				1	1	1	1	1	1	1

* It's initial setting when power is turned on.

<2> Input Selector (Sub Address: 02H)

Setting	Input Selector		
	D7	D6	D5
IN1	0	0	0
IN2	0	0	1
IN3	0	1	0
IN4	0	1	1
IN5	1	0	0
MUTE	1	1	1

<3> Input Gain (Sub Address: 02H)

Setting	Input Gain			
	D4	D3	D2	D1
0dB	0	0	0	0
+2dB	0	0	0	1
+4dB	0	0	1	0
+6dB	0	0	1	1
+8dB	0	1	0	0
+10dB	0	1	0	1
+12dB	0	1	1	0
+14dB	0	1	1	1
+16dB	1	0	0	0
+18db	1	0	0	1
+20dB	1	0	1	0

<4> Stereo / Mono Selector (Sub Address: 03H)

Setting	Mode Selector	
	D7	D6
Stereo	0	0
Lch Mono	0	1
Rch Mono	1	0

<5> Mode Selector (Sub Address: 03H)

Setting	Mode Selector	
	D5	D4
Bypass	0	0
Tone	0	1
Tone & Surround Hi	1	0
Tone & Surround Low	1	1

* It's initial setting when power is turned on.

<6> Tone control (Sub Address: 04H)

Gain	Bass	D7	D6	D5	D4
	Treble	D3	D2	D1	D0
0dB		A	0	0	0
2dB			0	0	1
4dB			0	1	0
6dB			0	1	1
8dB			1	0	0
10dB			1	0	1
12dB			1	1	0
14dB			1	1	1

If A = 0 means Tone control gain CUT(–), then A = 1 means Tone control gain BOOST(+).

* It's initial setting when power is turned on.

Electrical Characteristics

(V_{CC} = 9V, Ta = 25°C, Vi = 100mVrms, f = 1kHz, Tone control = 0dB, Rg = 600Ω, RL = 47kΩ)

General Characteristics

Parameter	Symbol	Limits			Unit	Condition
		Min	Typ	Max		
Operational power supply	V_{CC}	4.75	9.0	9.7	V	
Supply current	I_{CC}	—	15	25	mA	No signal
Reference voltage	Vref	4.0	4.5	5.0	V	No signal
Input impedance	RIN	35	50	65	kΩ	
Maximum output voltage	VOM	—	2.5	—	Vrms	VOL = 0dB, THD = 1%
Volume maximum	VOLmax	–2	0	+2	dB	VOL = 0dB
Volume minimum	VOLmin	—	–100	–90	dB	VOL = Mute, Vin = 1Vrms, IHF-A
Channel balance	CBAL	–1.5	0	1.5	dB	VOL = 0dB
Total harmonic distortion	THD	—	0.01	0.5	%	400Hz to 30kHz BPF, Vo = 0.5Vrms
Input selector cross talk	CT	—	–100	–70	dB	400Hz to 30kHz BPF Vin = 1Vrms
Channel separation	CS	—	–100	–70	dB	400Hz to 30kHz BPF Vin = 1Vrms
Output noise 1	Vno1	—	30	50	μVrms	VOL = 0dB, Input gain = 0dB Tone = 0dB, Surround = Low, IHF-A
Output noise 2	Vno2	—	5	15	μVrms	VOL = Mute, Input gain = 0dB Bypass, IHF-A

Tone Control

Parameter	Symbol	Limits			Unit	Condition
		Min	Typ	Max		
Tone control voltage gain (Boost/ Bass)	G(Bass)B	+11.5	+14	+16.5	dB	f = 100Hz, Bass = +14dB
Tone control voltage gain (Cut/ Bass)	G(Bass)C	–16.5	–14	–11.5	dB	f = 100Hz, Bass = –14dB
Tone control voltage gain (Flat/ Bass)	G(Bass)F	–2	0	+2	dB	f = 100Hz, Bass = 0dB
Tone control voltage gain (Boost/ Treble)	G(Treble)B	+11.5	+14	+16.5	dB	f = 10kHz, Tre = +14dB
Tone control voltage gain (Cut/ Treble)	G(Treble)C	–16.5	–14	–11.5	dB	f = 10kHz, Tre = –14dB
Tone control voltage gain (Flat/ Treble)	G(Treble)F	–2	0	+2	dB	f = 100Hz, Tre = 0dB

Bus Line Timing Specification

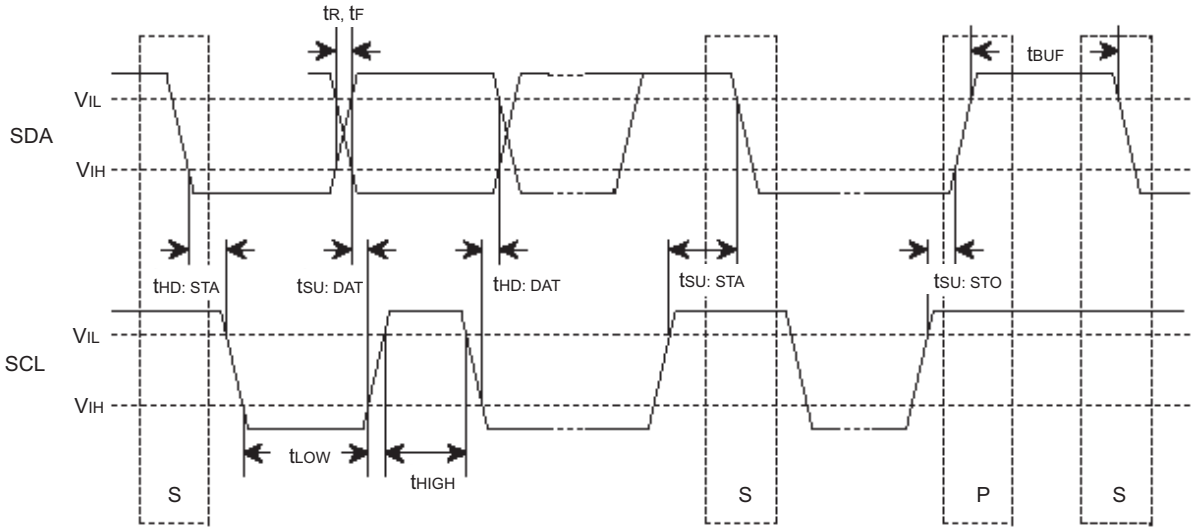

Parameters	Symbol	Min	Max	Units
Min input low voltage	V_{IL}	0	1.5	V
Max input high voltage	V_{IH}	3.0	5.0	V
SCL clock frequency	f_{SCL}	—	100	kHz
Time the bus must be free before a new transmission can start	t_{BUF}	4.7	—	µs
Hold time start condition. After this period the first clock pulse is generated	t_{HDSTA}	4.0	—	µs
The Low period of the clock	t_{Low}	4.7	—	µs
The High period of the clock	t_{High}	4.0	—	µs
Set-up time for start condition (Only relevant for a repeated start condition)	$t_{SU: STA}$	4.7	—	µs
Hold time DATA	$t_{HD: DAT}$	0	—	µs
Set-up time DATA	$t_{SU: DAT}$	250	—	ns
Rise time of both SDA & SCL lines	t_R	—	1000	ns
Fall time of both SDA & SCL lines	t_F	—	300	ns
Set-up time for stop condition	$t_{SU: STO}$	4.0	—	µs

Function Description

1. Tone Control

<1> Bass Circuit

Boost

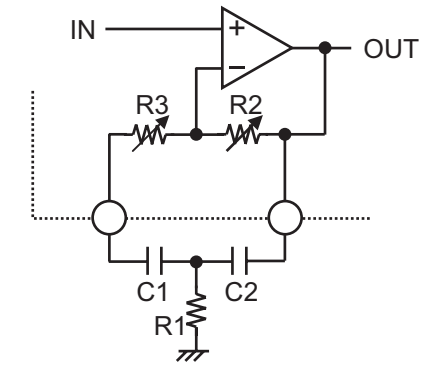

$$fo = \frac{1}{2\pi\sqrt{R1(R2+R3)C1C2}} \quad (Hz)$$

$$Q \cong \frac{1}{C1+C2}\sqrt{\frac{C1C2R2}{R1}} \quad (R3=0)$$

$$Gv = 20\log\left(\frac{\frac{R2+R3}{R1}+2}{\frac{R3}{R1}+2}\right) \quad (dB) \quad (C1=C2)$$

R1=8.2kΩ
C1=C2=0.068μF

Setting [dB]	R2[Ω]	R3[Ω]
± 0	0	80000
± 2	19820	60180
± 4	35570	44430
± 6	48040	31920
± 8	58020	21980
± 10	65910	14090
± 12	72190	7810
± 14	77170	2830

Cut

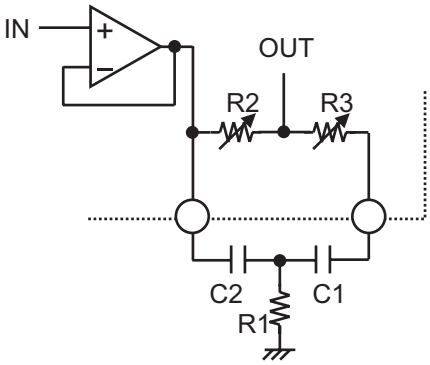

$$fo = \frac{1}{2\pi\sqrt{R1(R2+R3)C1C2}} \quad (Hz)$$

$$Q \cong \frac{1}{C1+C2}\sqrt{\frac{C1C2R2}{R1}} \quad (R3=0)$$

$$Gv = 20\log\left(\frac{\frac{R3}{R1}+2}{\frac{R2+R3}{R1}+2}\right) \quad (dB) \quad (C1=C2)$$

<2> Treble Circuit

Boost

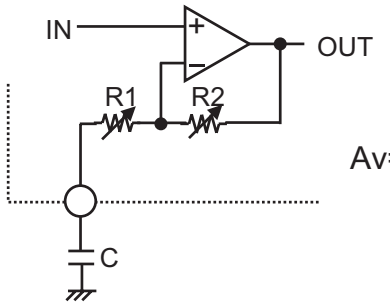

$$Av = 20\log\sqrt{\frac{\{\omega C(R1+R2)\}^2+1}{(\omega CR1^2)+1}} \quad (dB)$$

$*\omega=2\pi f$

C=8200pF

Setting [dB]	R1 [Ω]	R2 [Ω]
± 0	30000	0
± 2	23810	6190
± 4	18890	11110
± 6	14970	15030
± 8	11850	18150
± 10	9350	20650
± 12	7340	22660
± 14	5730	24270

Cut

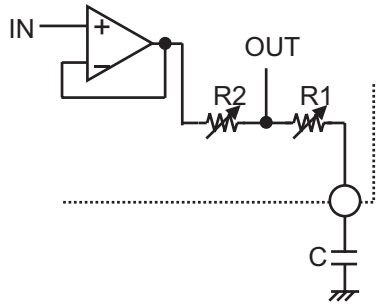

$$Av = 20\log\sqrt{\frac{(\omega CR1)^2+1}{\{\omega C(R1+R2)\}^2+1}} \quad (dB)$$

$*\omega=2\pi f$

Renesas Technology Corp. Sales Strategic Planning Div. Nippon Bldg., 2-6-2, Ohte-machi, Chiyoda-ku, Tokyo 100-0004, Japan

RENESAS SALES OFFICES

http://www.renesas.com

Refer to "**http://www.renesas.com/en/network**" for the latest and detailed information.

Renesas Technology America, Inc.
450 Holger Way, San Jose, CA 95134-1368, U.S.A
Tel: <1> (408) 382-7500, Fax: <1> (408) 382-7501

Renesas Technology Europe Limited
Dukes Meadow, Millboard Road, Bourne End, Buckinghamshire, SL8 5FH, U.K.
Tel: <44> (1628) 585-100, Fax: <44> (1628) 585-900

Renesas Technology (Shanghai) Co., Ltd.
Unit 204, 205, AZIACenter, No.1233 Lujiazui Ring Rd, Pudong District, Shanghai, China 200120
Tel: <86> (21) 5877-1818, Fax: <86> (21) 6887-7858/7898

Renesas Technology Hong Kong Ltd.
7th Floor, North Tower, World Finance Centre, Harbour City, Canton Road, Tsimshatsui, Kowloon, Hong Kong
Tel: <852> 2265-6688, Fax: <852> 2377-3473

Renesas Technology Taiwan Co., Ltd.
10th Floor, No.99, Fushing North Road, Taipei, Taiwan
Tel: <886> (2) 2715-2888, Fax: <886> (2) 3518-3399

Renesas Technology Singapore Pte. Ltd.
1 Harbour Front Avenue, #06-10, Keppel Bay Tower, Singapore 098632
Tel: <65> 6213-0200, Fax: <65> 6278-8001

Renesas Technology Korea Co., Ltd.
Kukje Center Bldg. 18th Fl., 191, 2-ka, Hangang-ro, Yongsan-ku, Seoul 140-702, Korea
Tel: <82> (2) 796-3115, Fax: <82> (2) 796-2145

Renesas Technology Malaysia Sdn. Bhd
Unit 906, Block B, Menara Amcorp, Amcorp Trade Centre, No.18, Jln Persiaran Barat, 46050 Petaling Jaya, Selangor Darul Ehsan, Malaysia
Tel: <603> 7955-9390, Fax: <603> 7955-9510

Colophon .7.2